成都亿佰特电子科技有限公司
Chengdu Ebyte Electronic Technology Co.,Ltd.

E3A-DTU-1W Datasheet v1.0

1．Introduction 2
1.1 Features 2
1.2 Electrical parameter 3
1.3 E3A series 4
2．Functional description 4
2.1 Pin definition 4
2.2 Connection type 5
3． Operating mode 6
4． Instruction format 6
4.1 Factory default parameter 6
4.2 Parameter setting instruction 7
4.3 Reading operating parameter 9
4.4 Reading version number 9
4.5 Reset instruction 10
5． Parameter setting 10
6． About us 11

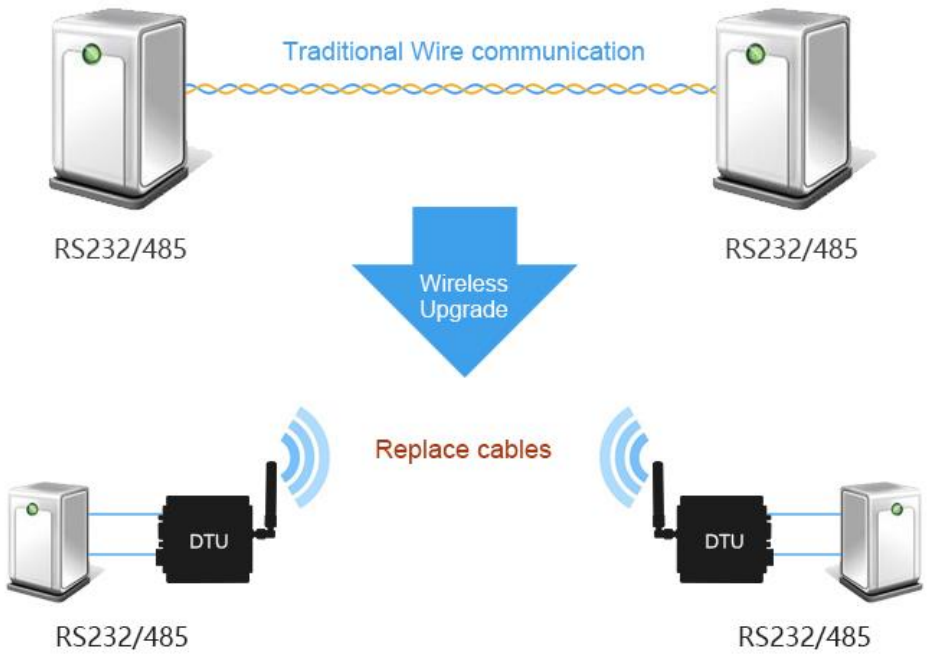

 All rights and authority for the interpretation of the products are reserved by Cdebyte

1 . Introduction E3A-DTU-1W

1.1 Features E3A-DTU-1W

E3A-DTU-1W is a 433M wireless transceiver (with RS232/485 interfaces) with transparent transmission, operates at 425-450.5MHz (default: 433MHz), the operating voltage is 8V ~ 28V.

The DTU features FEC (Forward Error Correction) algorithm, which ensure its high coding efficiency & good correction performance. In the case of sudden interference, it can correct the interfered data packets proactively, so that the reliability & transmission range are improved correspondingly. If without FEC, those date packets can only be dropped.

The DTU has the function of data encryption & compression. The data transmitted over the air features randomness. And with the rigorous encryption & decryption, data interception becomes pointless. The function of data compression can decrease the transmission time & probability of being interfered, while improving the reliability & transmission efficiency.

No.	Feature	Description
1	Ultra low power consumption	It supports WOR to reduce overall power consumption: In power-saving mode(M2), it can regulate overall power consumption by setting receiving response delay; The maximum receiving response delay can be configured is 2000ms.
2	Fixed transmission	Master can transmit data to other DTUs in different channels or addresses, easy for network and repeater, etc. For example: DTU A transmits AA BB CC to DTU B (address: 0x00 01, channel: 0x80), HEX format is 00 01 80 AA BB CC (00 01 refers to the address of DTU B, 80 refers to the channel of DTU B), then DTU B receives AA BB CC (only DTU B).
3	Broadcast transmission	Set the DTU address as 0xFFFF, then the DTU can communicate with other DTUs in the same channel.
4	FEC	It features FEC (Forward Error Correction) algorithm. It has high coding efficiency & good correction performance. In a sudden interference, it can correct the interfered data packets proactively, so that the reliability & transmission range are improved proactively. Without FEC, those data packets can only be dropped.
5	Applicable environment	433MHz is for free, user can apply to use it directly; Comparing with 2.4GHz, 433MHz has some diffraction ability, but the air data rate is inferior to 2.4GHz; It is applicable for small data, long distance and interfered environment.
6	Watchdog	With a built-in watchdog and precise time configuration, once an exception occurs the DTU will restart within 0.107 second and continue to work on previous parameter settings.
See more details in related manual		

 All rights and authority for the interpretation of the products are reserved by Cdebyte

1.2 Electrical parameter E3A-DTU-1W

No.	Item	Parameter details	Description
1	Size	82 * 62 *25mm	Without antenna
2	Weight	135g	Without antenna
3	Frequency band	425 ~ 450.5MHz	Default: 433.0MHz, channel: 256, 433±5MHz (recommended)
4	Housing	Aluminium alloy	Black
5	Connector	RS485: 1 * 4 * 3.81 mm RS232: DB9	Screwing Standard DB9, hole
6	Supply voltage	8 ~ 28V DC	Note: the voltage higher than 28V is forbidden
7	Communication level	RS232/RS485	Available for RS232 and RS485
8	Operation range	6000m	Test condition：clear and open area & 20dBm, antenna gain: 5dBi，height: ＞2m，air data rate: 1kbps
9	Transmitting power	Maximum 30dBm	About 1W，can be configured to 30, 27, 24, 21dBm
10	Receiving sensitivity	-126dBm@1.2kbps	Sensitivity has nothing to do with baud rate and timing
11	Air data rate	1.2kbps	Can be configured to 1.2, 2.4, 4.8, 9.6, 19.2, 38.4, 50, 70kbps
12	Standby current	14mA	Mode 3 (power supply: 12V)
13	Transmitting current	530mA@20dBm	≥2A (recommended)
14	Receiving current	28mA	12V
15	Communication interface	RS232/RS485	8N1, 8E1, 8O1, eight kinds of UART baud rate from 1200 to 115200bps (default: 9600)
16	Driving mode	RS232/RS485	Can be configured to push-pull/high pull, open-drain
17	Transmitting length	512 bytes buffer	58 bytes per package
18	Receiving length	512 bytes buffer	58 bytes per package
19	Address	65536 configurable addresses	Easy for network, broadcast and fixed transmission
20	RSSI support	Built-in intelligent processing	-
21	Antenna type	SMA-K	External thread hole, 50Ω impedance
22	Operating temperature	-40 ~ +85℃	Industrial grade
23	Operating humidity	10% ~ 90%	Relative humidity, no condensation
24	Storage temperature	-40 ~ +125℃	Industrial grade

All rights and authority for the interpretation of the products are reserved by Cdebyte

1.3 E3A series E3A-DTU-1W

Model	Interface	Frequency (Hz)	Power (dBm)	Operation range (km)	Air data rate (bps)	Feature
E3A-DTU-50	RS232/RS485	433M	17	2.0	1.2k~70k	Narrow-band transmission
E3A-DTU-500	RS232/RS485	433M	27	4.0	1.2k~70k	Narrow-band transmission
E3A-DTU-1W	RS232/RS485	433M	30	6.0	1.2k~70k	Narrow-band transmission
E3A-DTU-1W can be compatible with other E3A series.						

2 . Functional description E3A-DTU-1W

2.1 Pin definition E3A-DTU-1W

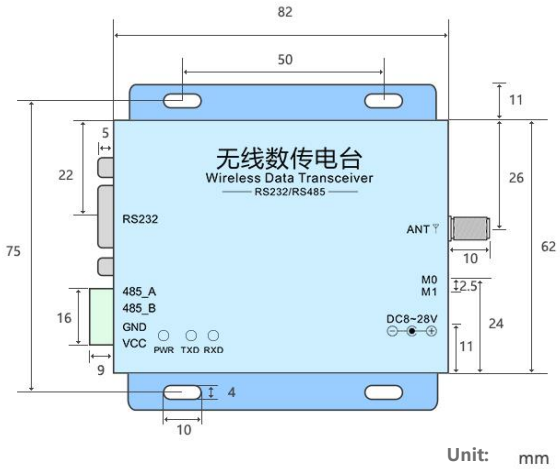

No.	Pin Item	Application
1	RS232	Standard DB9, hole
2	485_A	Connect to end A of other RS485 device
3	485_B	Connect to end B of other RS485 device
4	GND	Ground
5	VCC	Power supply, default: 8 ~ 28V (5V version can be customized), (DTU will select the higher voltage of power supply between 5 and 6)
6	DC8~28V	DC power connector (5.5*2.5) for DC8~28V (5V version can be customized)
7	ANT	Antenna interface (SMA-K external thread and internal hole, 50Ω impedance)
8	PWR	Power supply source indicator
9	TXD	Transmitting indicator
10	RXD	Receiving indicator
11	M0	Dip switch (control operating mode)
12	M1	Dip switch (control operating mode)
★ E3A-DTU-1W can be compatible with other E3A series ★		

All rights and authority for the interpretation of the products are reserved by Cdebyte

2.2 Connection type E3A-DTU-1W

- RS232 Connection

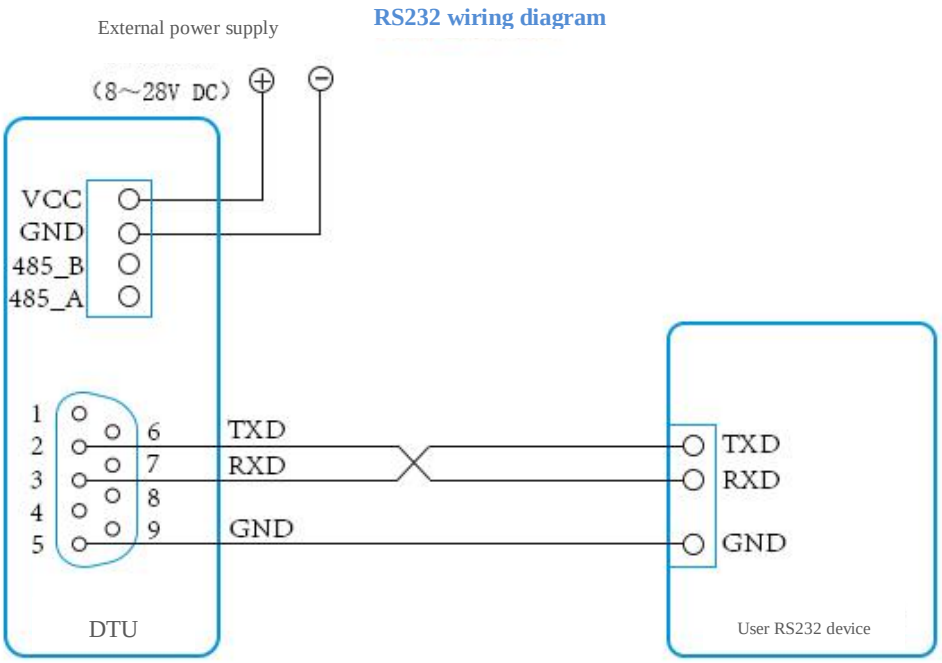

- RS485 Connection

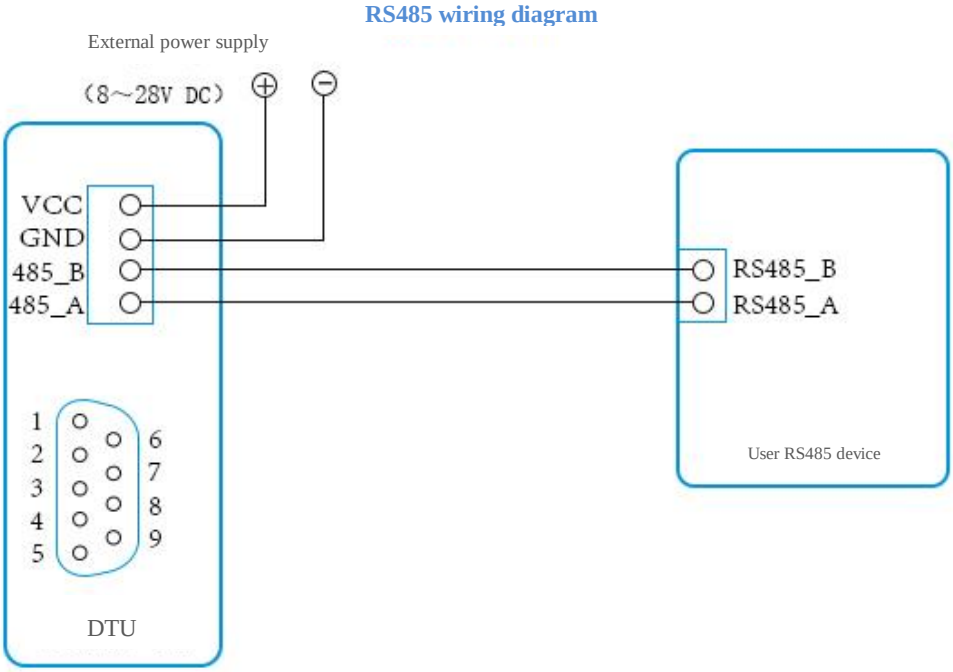

 All rights and authority for the interpretation of the products are reserved by Cdebyte

3 . Operating mode E3A-DTU-1W

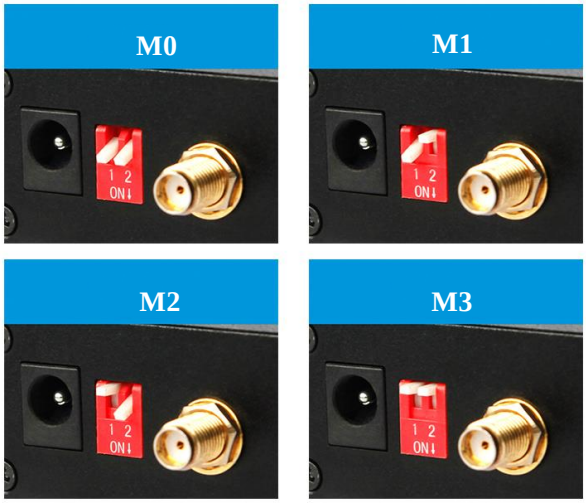

	Mode	M1	M0	Description
M0	Normal Mode	On	On	Open UART and RF and transparent transmission is on
M1	Wake-up Mode	On	Off	The DTU can transmit data in this mode and data packet contains preamble code
M2	Power-saving Mode	Off	On	DTU in Mode 2 cannot transmit data. DTU in Mode 2 can only receive data transmitted from DTU in Mode 1 and the receiving power in Mode 2 is saved
M3	Sleep Mode	Off	Off	Parameter setting

4 . Instruction format E3A-DTU-1W

In sleep mode (mode 3 : M1=off, M0=off) , it supports below instructions on list.

(**Only support 9600 and 8N1 format when setting**) :

No.	Format	Description
1	C0+working parameters	C0 + 5 bytes working parameters are sent in hexadecimal format. 6 bytes in total and must be sent in succession. (Save the parameters when power-down)
2	C1+C1+C1	Three C1 are sent in hexadecimal format. The DTU returns the saved parameters and must send in succession.
3	C2+working parameter	C2 + 5 bytes working parameters are sent in hexadecimal format. 6 bytes in total and must be sent in succession. (Not save the parameters when power-down)
4	C3+C3+C3	Three C3 are sent in hexadecimal format. The DTU returns the version information and must send in succession.
5	C4+C4+C4	Three C4 are sent in hexadecimal format. The DTU will reset for one time and they must be sent in succession.

4.1 Factory default parameter E3A-DTU-1W

Model	Factory default parameter: C0 00 00 18 50 44						
DTU	Frequency	Address	Channel	Air data rate	Baud rate	UART format	Transmitting power
E3A-DTU-1W	433MHz	0x0000	0x50	1.2kbps	9600	8N1	17dBm

All rights and authority for the interpretation of the products are reserved by Cdebyte

4.2 Parameter setting instruction E3A-DTU-1W

C0 and C2 are operating parameters. The difference between C0 command and C2 command is that C0 command will write parameters into the internal flash memory and can be saved when power-down, while C2 command can not be saved when powering down, because C2 command is temporarily mend instruction.C2 is recommended for the occasion that need to change the operating parameters frequently, such as C2 00 00 18 50 44.

No.	Item	Description	Notes
0	HEAD	Fix 0xC0 or 0xC2, it means this frame data is control command	● Must be 0xC0 or 0xC2 C0: Save the parameters when power-down C2: Not save the parameters when power-down.
1	ADDH	High address byte of DTU (the default 00H)	00H-FFH
2	ADDL	Low address byte of module (the default 00H)	00H-FFH
3	SPED	Rate parameter , including UART baud rate and air date rate 7, 6: UART parity bit 00 : 8N1 (default) 01 : 8O1 10 : 8E1 11 : 8N1(equal to 00) ---------- 5 , 4 , 3 TTL UART baud rate(bps) 000 : 1200bps 001 : 2400bps 010 : 4800bps 011 : 9600bps (default) 100 : 19200bps 101 : 38400bps 110 : 57600bps 111 : 115200bps ---------- 2 , 1 , 0 Air date rate(bps) 000 : 1.2kbps (default) 001 : 2.4kbps 010 : 4.8kbps 011 : 9.6kbps 100 : 19.2kbps 101 : 38.4kbps 110 : 50kbps 111 : 70kbps	● UART mode can be different between communication parties. ---------- ● UART baud rate can be different between communication parties. ● The UART baud rate has nothing to do with wireless transmission parameters & won’ t affect the wireless transmit / receive features. ---------- ● The lower the air date rate, the longer the transmitting distance, the better anti-interference performance and longer transmitting time. ● The air date rate must keep the same for both communication parties.
4	CHAN	Communication frequency (425M + CHAN * 0.1M) (default 50H:433M)	● 00H-FFH, 425~450.5MHz

All rights and authority for the interpretation of the products are reserved by Cdebyte

5	OPTION	7, Fixed transmission (similar to Modbus) 0 : Transparent transmission mode (default) 1 : Fixed transmission mode ---------- 6 IO drive mode (the default 1) 1 : TXD, AUX push-pull, RXD pull-up inputs 0 : TXD, AUX open-drain outputs, RXD open-drain inputs ---------- 5, 4, 3 Wireless wake-up time (for the receiver, it means the monitor interval time ,while for the transmitter it means continuously sending preamble code time.) 000 : 250ms (default) 001 : 500ms 010 : 750ms 011 : 1000ms 100 : 1250ms 101 : 1500ms 110 : 1750ms 111 : 2000ms	• In fixed transmission mode, the first three bytes of each user's data frame can be used as high/low address and channel. The module changes its address and channel when transmitting. And it will revert to original setting after the process is completed. ---------- • This bit is used to the internal pull-up resistor. It also increases the level' s adaptability in case of open drain. But in some cases, it may need external pull-up resistor. ---------- • The transmit & receive module work in mode 0, whose delay time is invalid & can be arbitrary value. • The transmitter works in mode 1 can transmit the preamble code of the corresponding time continuously. • When the receiver works in mode 2, the time means the monitor interval time (wireless wake-up). Only the data from transmitter that works in mode 1 can be received. • The wake-up time set by transmitter cannot be less than the monitor interval time of receiver; otherwise, it may lead to data loss. In case of two-way communication, both parties should keep the wake-up time the same. • The longer the wake-up time, the lower the average receive current

All rights and authority for the interpretation of the products are reserved by Cdebyte

		---------- 2, FEC switch 0 : Turn off FEC 1 : Turn on FEC (default) ---------- 1, 0 Transmission power (approximation) 00 : 30dBm (default) 01 : 27dBm 10 : 24dBm 11 : 21dBm	consumption. ---------- ● After turn off FEC, the actual data transmission rate increases while anti-interference ability decreases. Also the transmission distance is relatively short. ● Both communication parties must keep on the same pages about turn-on or turn-off FEC. ---------- ● The external power must ensure that the ability of current output is more than 1.5A. And the power supply ripple must be below 100mV. ● Low power transmission is not recommended due to its low power supply efficiency.

For example: The meaning of No.3 "SPED" byte:

The binary bit of the byte	7	6	5	4	3	2	1	0
The specific value (configured by user)	0	0	0	1	1	0	0	0
Meaning	UART parity bit 8N1		UART baud rate is 9600			Air date rate is 1.2k		
Corresponding hexadecimal	1				8			

4.3 Reading operating parameter E3A-DTU-1W

Instruction format	Description
C1+C1+C1	In sleep mode, user gives the DTU instruction (HEX format): C1 C1 C1, It returns the present configuration parameters. For example: C0 00 00 18 50 44.

4.4 Reading version number E3A-DTU-1W

Instruction format	Description
C3+C3+C3	In sleep mode, user gives the DTU instruction (HEX format): C3 C3 C3 , It returns its present version number, for example: C3 31 xx yy。 31 here means the DTU model (E3A series); xx is the version number and yy refers to other features.

All rights and authority for the interpretation of the products are reserved by Cdebyte

4.5 Reset instruction E3A-DTU-1W

Instruction format	Description
C4+C4+C4	In sleep mode, user gives the DTU instruction (HEX format): C4 C4 C4, it resets for one time. During the reset process, the DTU will conduct self-check, AUX outputs low level. After reset is completed, the AUX outputs high level, then it starts to work regularly, then the working mode can be switched or be given another instruction.

5 . Parameter setting E3A-DTU-1W

Configure the DTU to sleep mode. Switch the dip switch to M3 (as shown in the picture)	

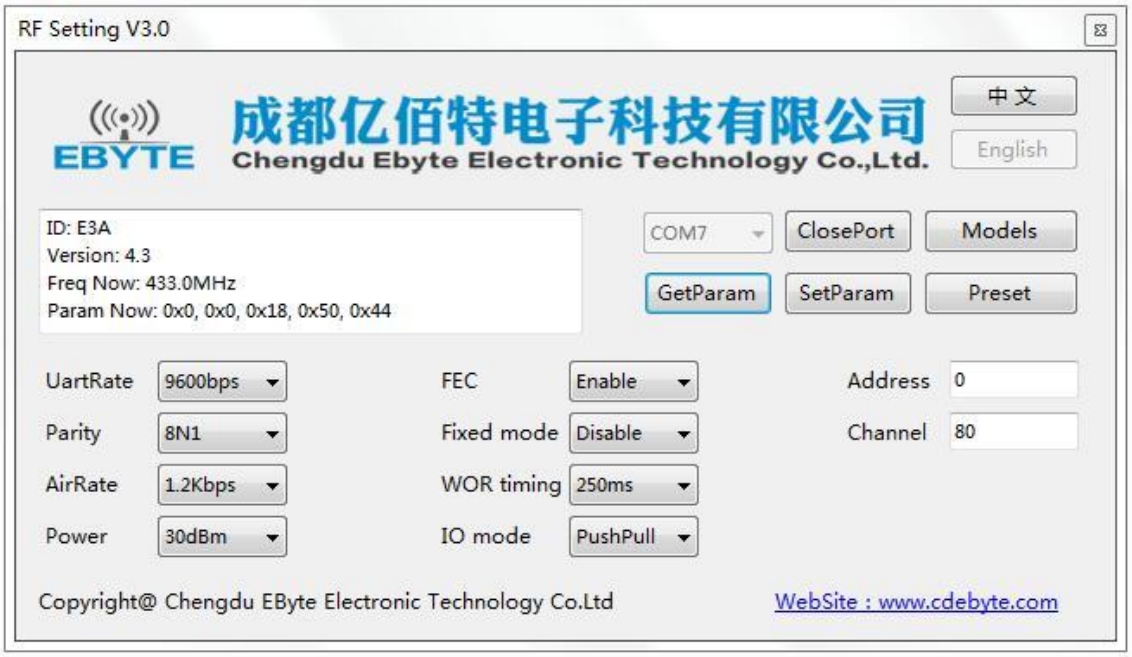

 All rights and authority for the interpretation of the products are reserved by Cdebyte

6 . About us E3A-DTU-1W

Chengdu Ebyte Electronic Technology Co., Ltd., a high-tech company focusing on application of Internet of Things, owns a number of independently researched and developed products and obtains unanimous approvals from customers. With a powerful R&D team, perfect after-sales system, our company provides perfect solutions and technical assistance, shortens R&D period, reduces R&D cost and provides a strong platform for brand new ideas about product R&D.

Our products have been widely applied in various fields, such as consumer electronics, industrial control, healthcare, security alarm, field acquisition, smart home, expressway, property management, water and electricity meter reading, power monitoring, etc.

EBYTE 成都亿佰特电子科技有限公司
Chengdu Ebyte Electronic Technology Co.,Ltd.

【Website】：www.cdebyte.com 【Technical support】：support@cdebyte.com
【eBay】：stores.ebay.com/cdebyte 【Alibaba】：cdebyte.en.alibaba.com
【Address】: Innovation Center D347, 4#XI-XIN road, High-tech district (West), Chengdu, Sichuan, China

 All rights and authority for the interpretation of the products are reserved by Cdebyte