Power Supply

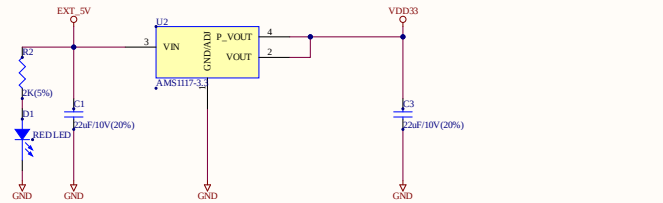

Module

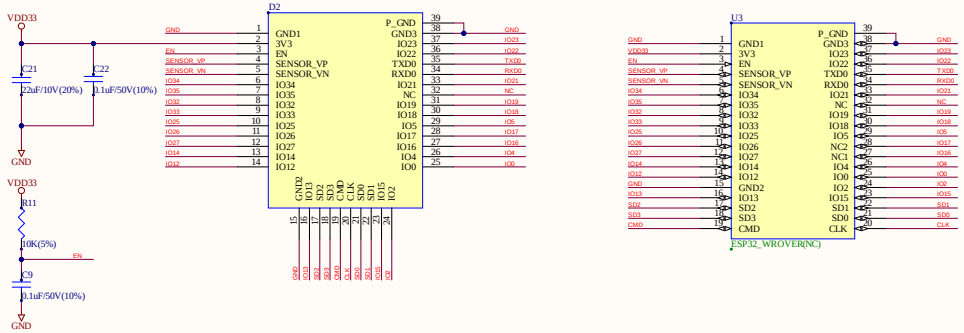

USB 5V&USB-UART

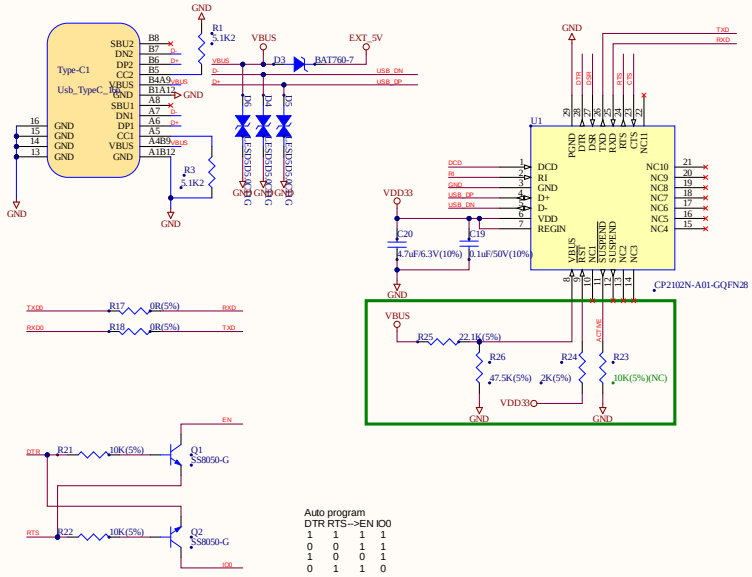

Auto program

DTR	RTS-->EN	IO0	
1	1	1	1
0	0	1	1
1	0	0	1
0	1	1	0

SWITCH BUTTON

Connector

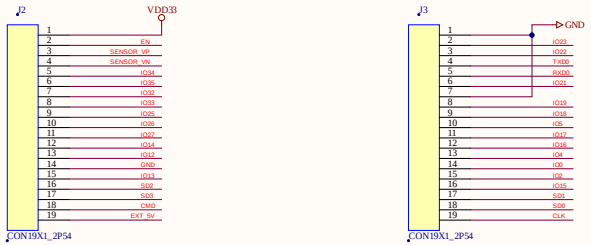

ESPRESSIF
乐鑫信息科技（上海）有限公司

Title	ESP32_DevKitc_V4	
Size A	Document Number	Rev X
Date: *	Sheet 1 of 1	