AX5043 Wireless Module

E51 Series

User Manual

This manual may be modified based on product upgrade, please refer to the latest version.
All rights to interpret and modify this manual belong to Chengdu Ebyte Electronic Technology Co., Ltd.

Version	Date	Description	Issued by
1.00	2017/12/13	Initial version	huaa

Brief Introduction

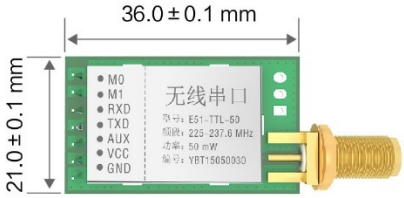

E51-TTL-50

E51-TTL-500

E51-TTL-2W

E51 series wireless transceiver modules, operate at 225~237.6MHz (Default: 230MHz) with transparent transmission available, TTL level, WOR (ultra-low power consumption). They feature half duplex and DIP interface.

The module has the function of data encryption & compression. The data of the module transmitted over the air features randomness. With the rigorous encryption & decryption, data interception becomes pointless. The function of data compression decreases the transmission time & probability of being interfered, while improving the reliability & transmission efficiency.

E51 series strictly stick to the design rules home and abroad of FCC, CE, CCC and meet the related RF certifications and export standards.

Model	Frequency	Transmitting power	Distance	Packing	Antenna
E51-TTL-50	230M	17dBm	2000m	DIP	SMA-K
E51-TTL-500	230M	27dBm	4000m	DIP	SMA-K
E51-TTL-2W	230M	33dBm	8000m	DIP	SMA-K

Copyright ©2012–2017, Chengdu Ebyte Electronic Technology Co., Ltd.

Contents

1. Features 5

2. Technical Parameters 5

2.1 Electrical Parameters 6
2.1.1 Transmitting Current 6
2.1.2 Receiving Current 6
2.1.3 Turn-off Current 6
2.1.4 Voltage Supply 6
2.1.5 Communication Level 7
2.2 RF Parameters 7
2.2.1 Transmitting Power 7
2.2.2 Receiving Sensitivity 7
2.2.3 Recommended Working Frequency 7
2.3 Tested Parameters 8
2.3.1 Tested Distance 8

3. Mechanical Characteristics 8

3.1 E51-TTL-50 8
3.1.1 Dimension 8
3.1.2 Pin Definition 9
3.2 E51-TTL-500 9
3.2.1 Dimension 9
3.2.2 Pin Definition 10
3.3 E51-TTL-2W 10
3.3.1 Dimension 10
3.3.2 Pin Definition 11

4. Recommended Circuit Diagram 11

5. Function Description 12

5.1 Fixed Transmission 12
5.2 Broadcast Transmission 12
5.3 Broadcast Address 12
5.4 Monitor Address 12
5.5 Reset 13
5.6 AUX Description 13
5.6.1 Indication of UART Output 13
5.6.2 Indication of Wireless Transmitting 13
5.6.3 Configuration Procedure of Module 13
5.6.4 Notes for AUX 14

6. Operating Mode 14

6.1 Mode Switch 14

Copyright ©2012–2017, Chengdu Ebyte Electronic Technology Co., Ltd.

6.2 Normal Mode（Mode 0）.....15
6.3 Wake-up Mode（Mode 1）.....15
6.4 Power-saving Mode（Mode 2）.....15
6.5 Sleep Mode (Mode 3).....16

7. Instruction Format.....16

7.1 Default Parameter.....16
7.2 Reading Operating Parameters.....17
7.3 Reading Version Number.....17
7.4 Reset Instruction.....17
7.5 Parameter Setting Instruction.....17

8. Parameter Setting.....19

9. Production Guidance.....19

9.1 Reflow Soldering Temperature.....19
9.2 Reflow Soldering Curve.....20

10. FAQ.....20

10.1 Communication range is too short.....20
10.2 Module is easy to damage.....20

11. Important Notes.....21

12. About Us.....21

Copyright ©2012–2017, Chengdu Ebyte Electronic Technology Co., Ltd.

1. Features

- **Strong ability of diffraction:** 230M features in low frequency, long wave length and strong ability of diffraction. It is applicable in complicated environment.
- **Narrow band transmission:** Narrow band features high density, long transmitting distance and strong anti-interference ability. At same transmitting power, the transmitting distance is much longer than that of others.
- **Ultra-low power consumption:** It supports WOR, which suits for battery power supply. In power-saving mode (Mode 2), the overall power consumption can be regulated by setting receiving response delay and its maximum is 2000ms. The average current is about 30uA.
- **Fixed transmission**: Module can communicate with other modules which work in different channels and addresses. It makes networking and repeater easy. For example: module A transmits AA BB CC to module B (address: 0x00 01, channel: 0x80). The HEX format is 00 01 80 AA BB CC (00 01 refers to the address of module B, and 80 refers to the channel of module B). Then module B receives AA BB CC (only module B).
- **Broadcast transmission:** When the module address is set as 0xFFFF, the module can communicate with other modules in the same channel.
- **FEC:** Forward Error Correction has high coding efficiency & good correction performance. In case of sudden interference, it can correct the interfered data packets proactively, so that the reliability & transmission range are improved correspondingly. Without FEC, those data packets can only be dropped.
- **Sleep mode:** When the module works in sleep mode (Mode 3), it is available for configuration, but not for transmitting & receiving. The typical current is 2.0uA in this mode. It can still receive the configuration from the MCU.
- **Application:** 230M is electricity frequency band with few interferences and strong diffraction ability. It is applicable in complicated environment including working plant, factory, warehouse, office building and community.

2. Technical Parameters

Model	IC	Size	Net weight	Operating temperature	Operating humidity	Storage temperature
E51-TTL-50	AX5043	21*36mm	6.7±0.1g	-40 ~ 85C°	10% ~ 90%	-40 ~ 125°C
E51-TTL-500	AX5043	24*43mm	8.5±0.1g	-40 ~ 85C°	10% ~ 90%	-40 ~ 125°C
E51-TTL-2W	AX5043	37*60mm	25±0.1g	-40 ~ 85C°	10% ~ 90%	-40 ~ 125°C

Copyright ©2012–2017, Chengdu Ebyte Electronic Technology Co., Ltd.

2.1 Electrical Parameters

2.1.1 Transmitting Current

Model	Min	Typ	Max	Unit	Remarks
E51-TTL-50	59	64	70	mA	● When designing current supply circuit, 30% margin is recommended to be remained so as to ensure long-term stable operation of the whole module. ● The current at the instant of transmitting may be high, but the total energy consumed may be lower due to very short transmitting time. ● When using external antenna, the impedance matching degree at different frequency points between antenna and module may affect the transmitting current value at different levels.
E51-TTL-500	290	320	350	mA	
E51-TTL-2W	948	1030	1140	mA	

2.1.2 Receiving Current

Model	Min	Typ	Max	Unit	Remarks
E51-TTL-50	10	11	12	mA	● The current consumed when the RF chip is only working at receiving mode is called as receiving current , the tested receiving current may be higher for some RF chips with communication protocol or the developers have loaded their own protocol to the whole module. ● The current at pure receiving mode will be mA level, the users have to realize μA level receiving current through firmware development.
E51-TTL-500	10	11	12	mA	
E51-TTL-2W	14	15	17	mA	

2.1.3 Turn-off Current

Model	Min	Typ	Max	Unit	Remarks
E51-TTL-50	3.0	4.0	5.0	μA	● The turn-off current means the current consumed by CPU, RAM, Clock and some registers which remain operating. SoC is at very low power consumption status. ● The turn-off current is always lower than the current consumed when the power supply source of the whole module is at no-load status.
E51-TTL-500	4.0	5.0	6.0	μA	
E51-TTL-2W	4.0	5.0	6.0	μA	

2.1.4 Voltage Supply

Model	Min	Typ	Max	Unit	Remarks
E51-TTL-50	2.3	3.3	5.2	V DC	● If the module stays at maximum voltage for a long time, it may be damaged. ● The power supply pin has certain surge-resistance ability, but the potential pulse higher than the maximum power supply voltage. ●The power supply is not advisable to be below 3.0V, or the RF parameters will be influenced at different degree.
E51-TTL-500	3.3	5.0	5.2	V DC	
E51-TTL-2W	3.3	5.0	5.2	V DC	

Copyright ©2012–2017, Chengdu Ebyte Electronic Technology Co., Ltd.

2.1.5 Communication Level

Model	Min	Typ	Max	Unit	Remarks
E51-TTL-50	2.5	3.3	3.6	V DC	●If the module stays at maximum communication level for a long time, it may be damaged. ● Modules are compatible with some microcontrollers at 5V communication level. Please refer to practical test or contact us for more information.
E51-TTL-500	2.5	3.3	3.6	V DC	
E51-TTL-2W	2.5	3.3	3.6	V DC	

2.2 RF Parameters

2.2.1 Transmitting Power

Model	Min	Typ	Max	Unit	Remarks
E51-TTL-50	16	17	18	dBm	● Due to the error of the materials, each LRC component has ±0.1% error, so error accumulation will occur since multiple LRC components are used in the whole RF circuit, and the transmitting currents will be different at different modules. ● The power consumption can be lowered by lowering the transmitting power, but the efficiency of the internal PA will be decreased by lowering transmitting power due to various reasons; ● The transmitting power will be lowered by lowering the power supply voltage.
E51-TTL-500	26	27	28	dBm	
E51-TTL-2W	32	33	34	dBm	

2.2.2 Receiving Sensitivity

Model	Min	Typ	Max	Unit	Remarks
E51-TTL-50	-125	-126	-127	dBm	● The sensitivity is tested under the air data rate 1.3kbps. ● Due to the error of the materials, each LRC component has ±0.1% error, so error accumulation will occur since multiple LRC components are used in the whole RF circuit, and the transmitting currents will be different at different modules. ●The receiving sensitivity will be reduced and communication range will be shortened while increasing the air data rate.
E51-TTL-500	-125	-126	-127	dBm	
E51-TTL-2W	-125	-126	-127	dBm	

2.2.3 Recommended Working Frequency

Model	Min	Typ	Max	Unit	Remarks
E51-TTL-50	225.0	230.0	237.6	MHz	● To work within the recommended frequency can assure the modules to meet all the parameters. ● To avoid the crowded integral frequency like 433.0MHz、868.0MHz、915MHz etc. is advisable.
E51-TTL-500	225.0	230.0	237.6	MHz	
E51-TTL-2W	225.0	230.0	237.6	MHz	

Copyright ©2012–2017, Chengdu Ebyte Electronic Technology Co., Ltd.

2.3 Tested Parameters

2.3.1 Tested Distance

Model	Min	Typ	Max	Unit	Remarks
E51-TTL-50	1800	2000	2200	m	● The external antenna used is of 2.5dBi gain and vertical polarization. The height is 2.5 meters. ● The interval between each data packet is 2s, sending 100 packets with 30 bytes in each packet, the range at data lose rate of lower than 5% is valid range. ● In order to obtain meaningful and reproducible results, we conducted the tests under in clear weather with little electromagnetic interference at suburb areas. ● Distance may be shorter with interference or obstacles.
E51-TTL-500	3600	4000	4400	m	
E51-TTL-2W	7200	8000	8800	m	

3. Mechanical Characteristics

3.1 E51-TTL-50

3.1.1 Dimension

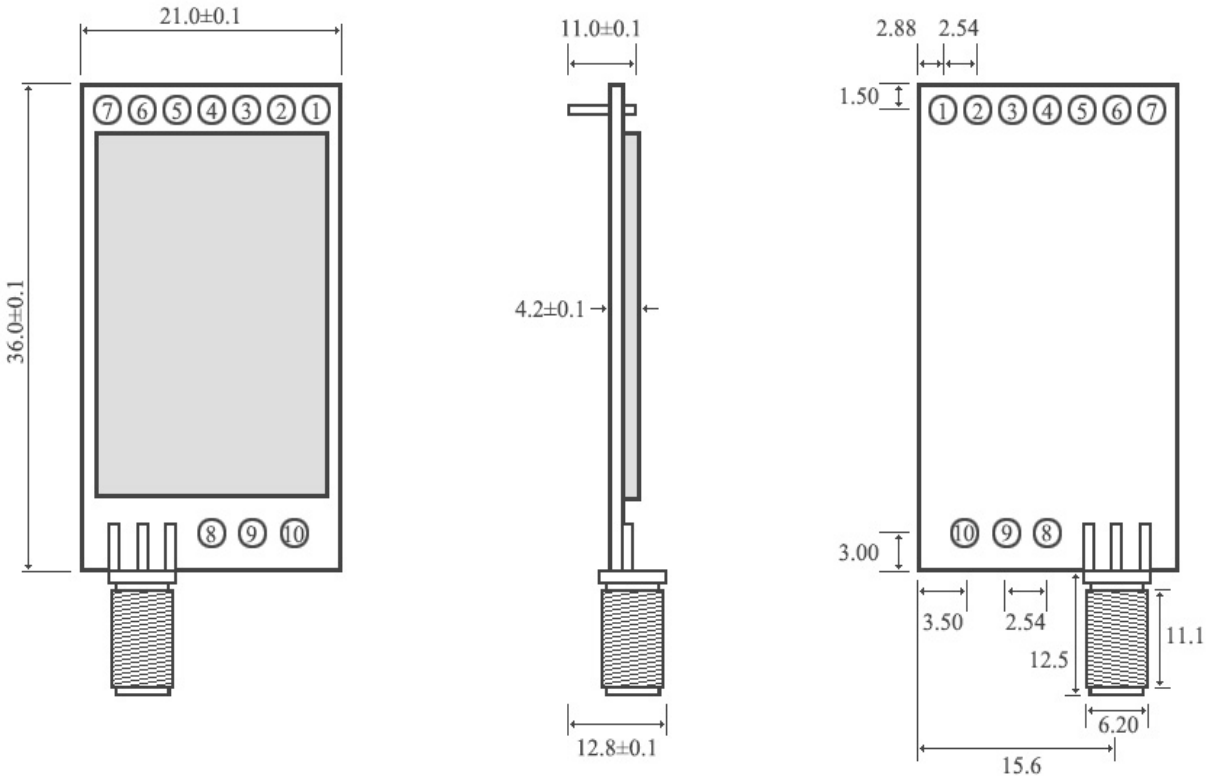

3.1.2 Pin Definition

Pin No.	Pin item	Pin direction	Pin application
1	M0	Input (weak pull-up)	Work with M1 & decide the four operating modes. Floating is not allowed, can be ground.
2	M1	Input (weak pull-up)	Work with M0 & decide the four operating modes. Floating is not allowed, can be ground.
3	RXD	Input	TTL UART inputs, connects to external (MCU, PC) TXD output pin. Can be configured as open-drain or pull-up input.
4	TXD	Output	TTL UART outputs, connects to external RXD (MCU, PC) input pin. Can be configured as open-drain or push-pull output.
5	AUX	Output	To indicate module' s working status & wakes up the external MCU. During the procedure of self-check initialization, the pin outputs low level. Can be configured as open-drain output or push-pull output. (Floating is allowed).
6	VCC	Input	Power supply 2.1V-5.5V DC
7	GND	Input	Ground electrode
8	Fixing hole		Fixing hole
9	Fixing hole		Fixing hole
10	Fixing hole		Fixing hole

3.2 E51-TTL-500

3.2.1 Dimension

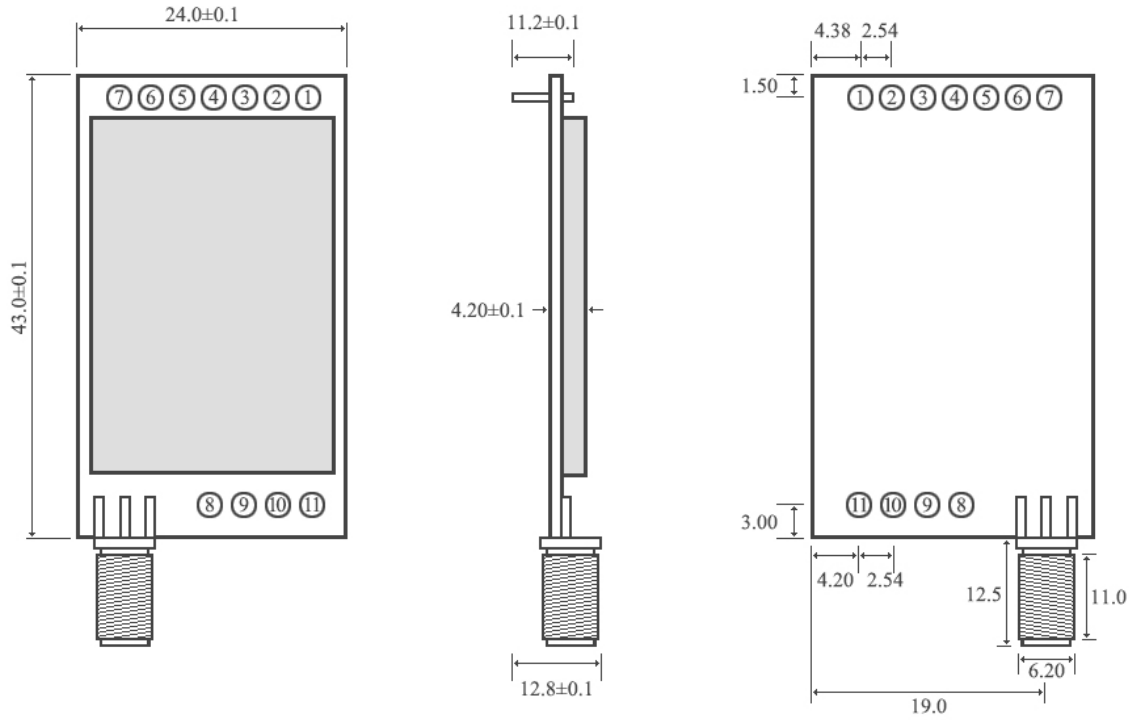

3.2.2 Pin Definition

Pin No.	Pin item	Pin direction	Pin application
1	M0	Input (weak pull-up)	Work with M1 & decide the four operating modes. Floating is not allowed, can be ground.
2	M1	Input (weak pull-up)	Work with M0 & decide the four operating modes. Floating is not allowed, can be ground.
3	RXD	Input	TTL UART inputs, connects to external (MCU, PC) TXD output pin. Can be configured as open-drain or pull-up input.
4	TXD	Output	TTL UART outputs, connects to external RXD (MCU, PC) input pin. Can be configured as open-drain or push-pull output.
5	AUX	Output	To indicate module' s working status & wakes up the external MCU. During the procedure of self-check initialization, the pin outputs low level. Can be configured as open-drain output or push-pull output. (Floating is allowed).
6	VCC	Input	Power supply 2.8V-5.5V DC
7	GND	Input	Ground electrode
8	Fixing hole		Fixing hole
9	Fixing hole		Fixing hole
10	Fixing hole		Fixing hole

3.3 E51-TTL-2W

3.3.1 Dimension

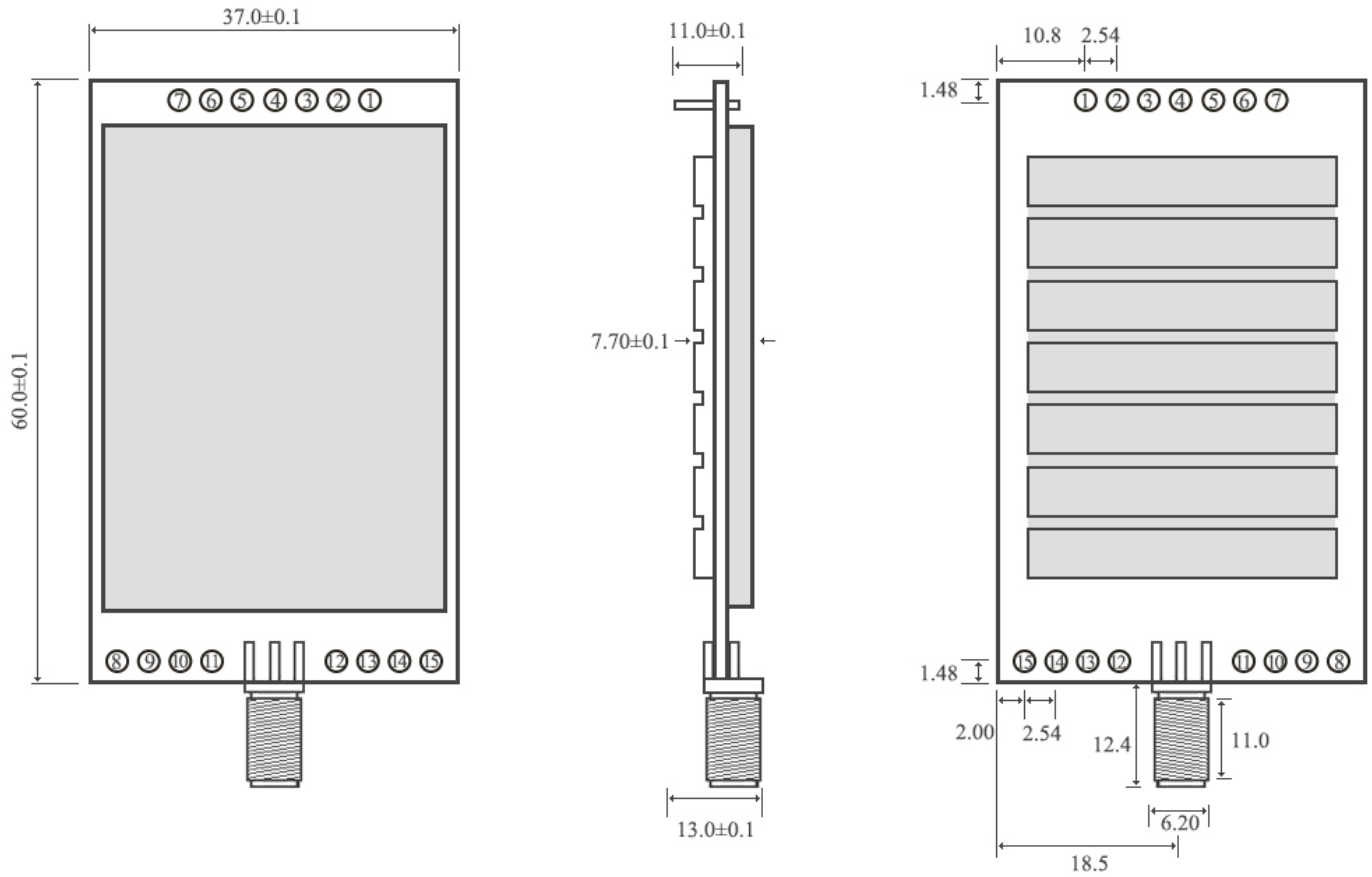

3.3.2 Pin Definition

Pin No.	Pin item	Pin direction	Pin application
1	M0	Input (weak pull-up)	Work with M1 & decide the four operating modes. Floating is not allowed, can be ground.
2	M1	Input (weak pull-up)	Work with M0 & decide the four operating modes. Floating is not allowed, can be ground.
3	RXD	Input	TTL UART inputs, connects to external (MCU, PC) TXD output pin. Can be configured as open-drain or pull-up input.
4	TXD	Output	TTL UART outputs, connects to external RXD (MCU, PC) input pin. Can be configured as open-drain or push-pull output.
5	AUX	Output	To indicate module' s working status & wakes up the external MCU. During the procedure of self-check initialization, the pin outputs low level. Can be configured as open-drain output or push-pull output. (Floating is allowed).
6	VCC	Input	Power supply 4.75V-5.25V DC
7	GND	Input	Ground electrode
8	Fixing hole		Fixing hole
9	Fixing hole		Fixing hole
10	Fixing hole		Fixing hole

4. Recommended Circuit Diagram

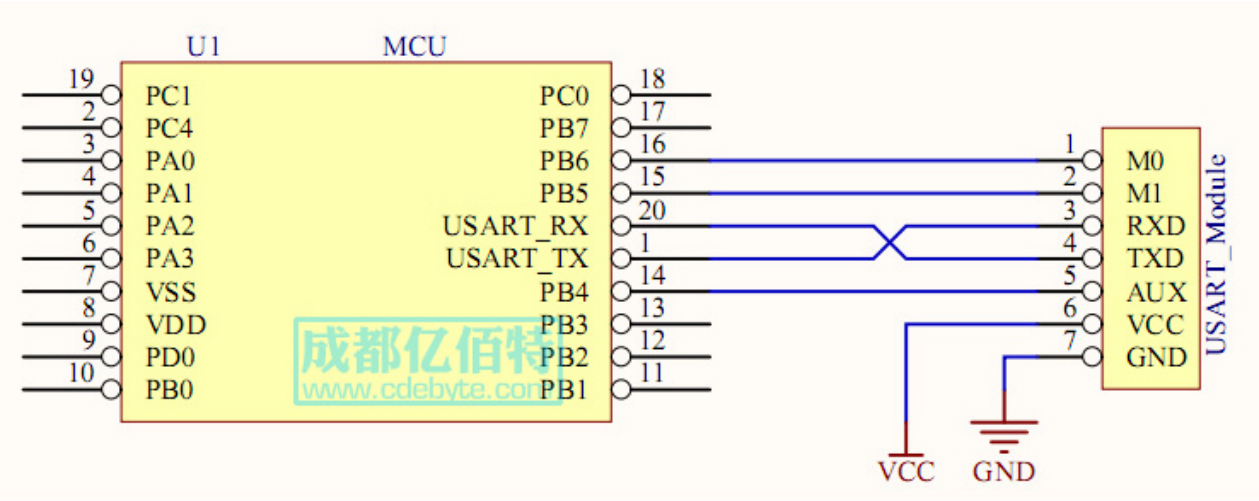

No.	Description (STM8L MCU)
1	The UART module is TTL level. Please connect to MCU of TTL level.
2	For some MCU works at 5VDC, it may need to add 4-10K pull-up resistor for the TXD & AUX pin.

Copyright ©2012–2017, Chengdu Ebyte Electronic Technology Co., Ltd.

5. Function Description

5.1 Fixed Transmission

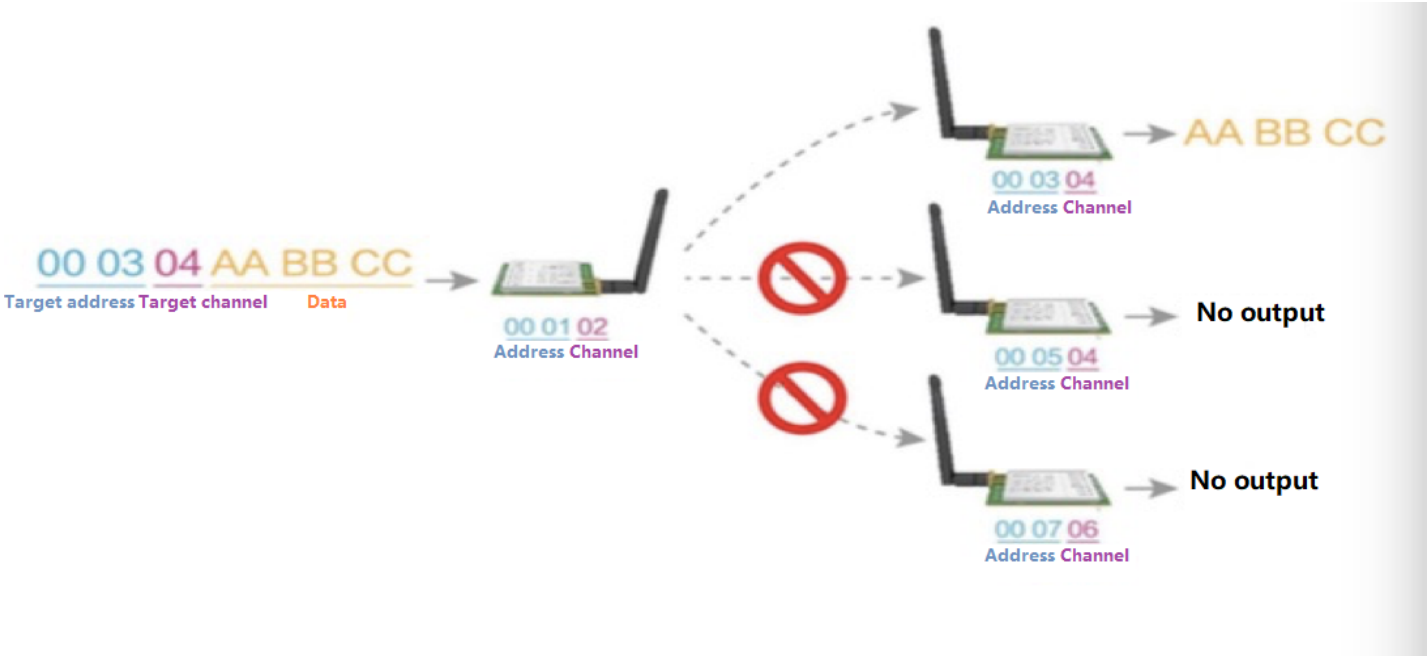

5.2 Broadcast Transmission

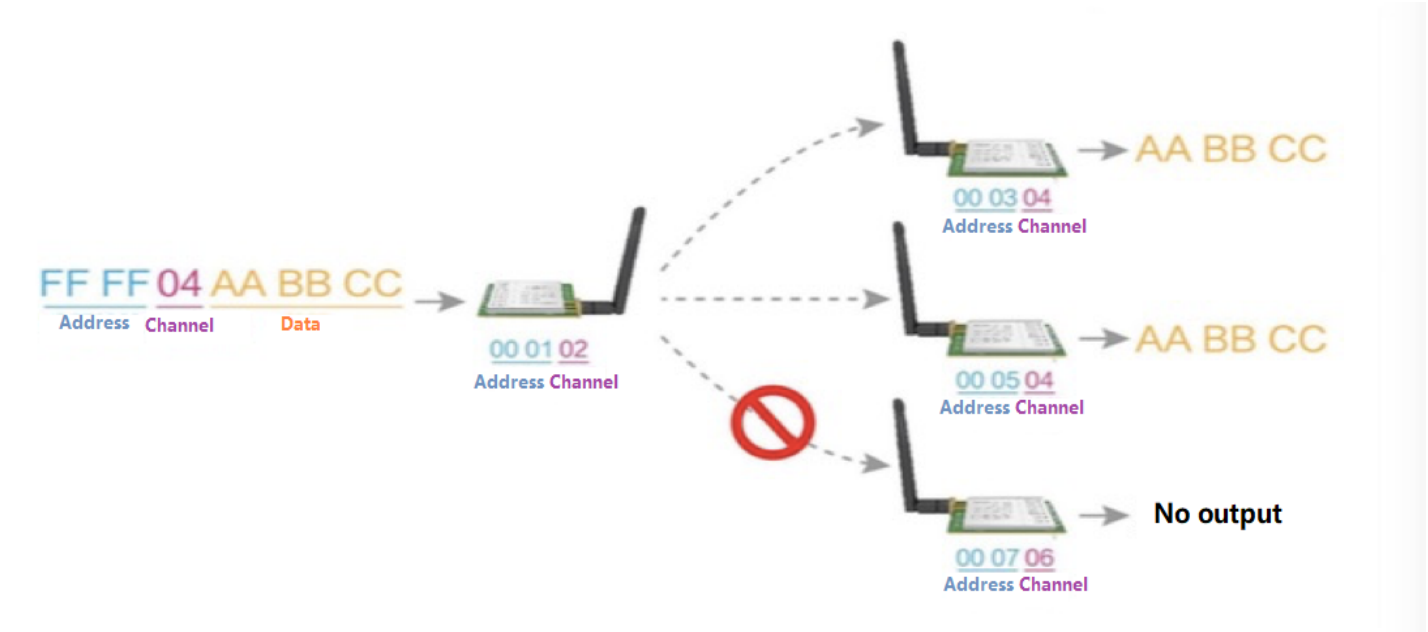

5.3 Broadcast Address

- For example: Set the address of module A as 0xFFFF or 0x0000, and the channel as 0x04;
- When module A is the transmitter (transparent transmission), all modules under channel 0x04 will receive the data, the purpose of broadcast is realized.

5.4 Monitor Address

- For example: Set the address of module A as 0xFFFF or 0x0000, and the channel as 0x04;
- When module A is the receiver, it can receive the data sent from all modules under channel 0x04, the purpose of monitor is realized.

Copyright ©2012–2017, Chengdu Ebyte Electronic Technology Co., Ltd.

5.5 Reset

When the module is powered, AUX outputs low level immediately, conducts hardware self-check and sets the operating mode on the basis of the user parameters. During the process, the AUX keeps low level. After the process completed, the AUX outputs high level and starts to work as per the operating mode combined byM1 and M0. Therefore, the user needs to wait the AUX rising edge as the starting point of module' s normal work.

5.6 AUX Description

5.6.1 Indication of UART Output

To wake up external MCU:

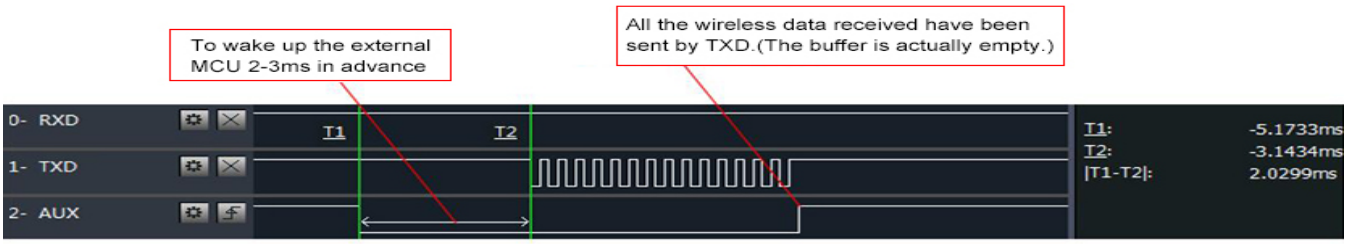

Timing Sequence Diagram of AUX when TXD pin transmits

5.6.2 Indication of Wireless Transmitting

Buffer (empty): the internal 512 bytes data in the buffer are written to the RFIC (Auto sub package). When AUX=1, the user can input data less than 512 bytes continuously without overflow.

Buffer (not empty): when AUX=0, the internal 512 bytes data in the buffer have not been written to the RFIC completely. If the user starts to transmit data at this circumstance, it may cause overtime when the module is waiting for the user data, or transmitting wireless sub package.

Notes: When AUX = 1, it does not mean that all the UART data of the module have been transmitted already, perhaps the last packet of data is still in transmission.

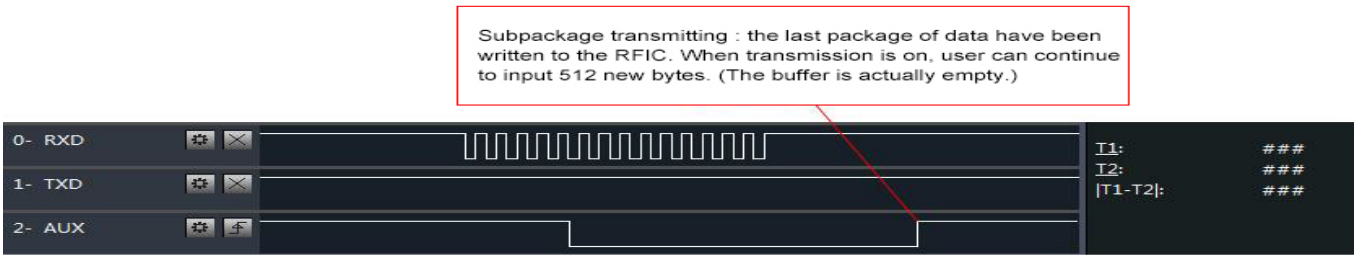

Timing Sequence Diagram of AUX when RXD pin receives

5.6.3 Configuration Procedure of Module

Only happened when power-on resetting or exiting sleep mode.

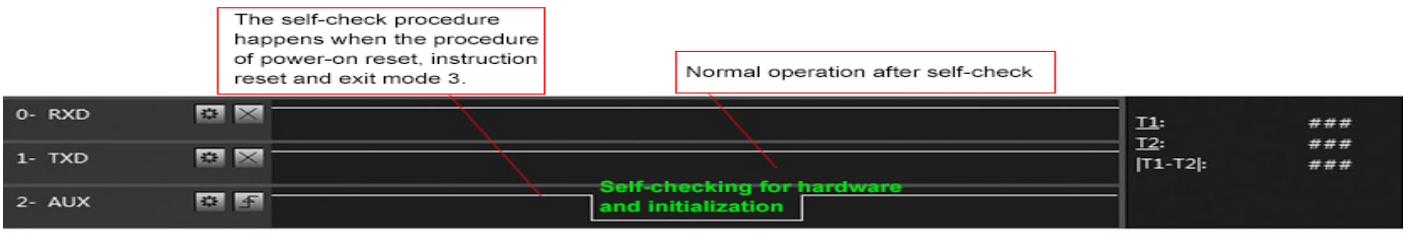

Timing Sequence Diagram of AUX when self-check

Copyright ©2012–2017, Chengdu Ebyte Electronic Technology Co., Ltd.

5.6.4 Notes for AUX

- For function 1 & function 2 mentioned above, the priority should be given to the one with low level output, which means if it meets each of any low level output condition, AUX outputs low level, if none of the low level condition is met, AUX outputs high level.
- When AUX outputs low level, it means the module is busy & cannot conduct operating mode checking. Within 1ms since AUX outputs high level, the mode switch will be completed.
- After switching to new operating mode, it won't be work in the new mode immediately until AUX rising edge 2ms later. If AUX is on the high level, the operating mode switch can be effected immediately.
- When the user switches to other operating modes from mode 3 (sleep mode) or it's still in reset process, the module will reset user parameters, during which AUX outputs low level.

6. Operating Mode

Contents in the table below are the introduction of input status of M1 & M0 and their corresponding mode:

Mode（0-3）	M1	M0	Mode introduction	Remark
Mode 0 Normal	0	0	UART and wireless channel are open, transparent transmission is on.	The receiver must work in mode 0 or mode 1.
Mode 1 Wake-up	1	0	UART and wireless channel are open. The difference between normal mode and wake-up mode is it will add preamble code automatically before data packet transmission so that it can awaken the receiver works in mode 2.	The receiver can work in mode 0, mode 1 or mode 2.
Mode 2 Power-saving	0	1	UART is disabled. Wireless module works at WOR mode (wake on radio). It will open the UART and transmit data after receiving the wireless data.	1, the transmitter must work in mode 1. 2, transmitting is not allowed in this mode.
Mode 3 Sleep	1	1	Parameter setting	See more in operating parameter.

6.1 Mode Switch

- The user can decide the operating mode by the combination of M0, M1 and M2. The two GPIOs of MCU can be used to switch mode. After modifying M0, M1 or M2, it will start to work in new mode 1ms later if the module is free. If there are any serial data that are yet to finish wireless transmitting, it will start to work in new mode after the UART transmitting finished. After the module receives the wireless data & transmits the data through serial port, it will start to work in new mode after the transmitting finished. Therefore, the mode-switch is only valid when AUX outputs 1, otherwise it will delay.
- For example, in mode 2 or mode 4, if the user inputs massive data consecutively and switches operating mode at the same time, the mode-switch operation is invalid. New mode checking can only be started after all the user's data process completed. It is recommended to check AUX pin out status and wait 2ms after AUX outputs high level before switching the mode.
- If the module switches from other modes to stand-by mode, it will work in stand-by mode only after all the remained data process completed. The feature can be used to save power consumption. For example, when the transmitter works in mode 0, after the external MCU transmits data "12345", it can switch to sleep mode immediately without waiting the rising edge of the AUX pin, also the user's main MCU will go dormancy immediately. Then the module will transmit all the data through wireless transmission & go dormancy 1ms later automatically, which reduces MCU working time & save power.

Copyright ©2012–2017, Chengdu Ebyte Electronic Technology Co., Ltd.

- Likewise, this feature can be used in any mode-switch. The module will start to work in new mode within 1ms after completing present mode task, which enables the user to omit the procedure of AUX inquiry and switch mode swiftly. For example, when switching from transmitting mode to receiving mode, the user MCU can go dormancy before mode-switch, using external interrupt function to get AUX change so that the mode-switch can be realized.
- This operation is very flexible and efficient. It is totally designed on the basis of the user MCU' s convenience, at the same time the work load and power consumption of the whole system has been reduced and the efficiency of whole system is largely improved.

6.2 Normal Mode（Mode 0）

Status	When M1 = 0, M0 = 0, module works in mode 0
Transmitting	The module can receive the user data via serial port, and transmit wireless data package of 58 bytes. When the data inputted by user is up to 58 byte, the module will start wireless transmission. During which the user can input data continuously for transmission. When the required transmission bytes are less than 58 bytes, the module will wait 3-byte time and treat it as data termination unless continuous data inputted by user. Then the module will transmit all the data through wireless channel. When the module receives the first data packet from user, the AUX outputs low level. After all the data are transmitted into RF chip and transmission is started, AUX outputs high level. At this time, it means that the last wireless data package transmission is started, which enables the user to input another 512 bytes continuously. The data package transmitted from the module working in mode 0 can only be received by the module working in mode 0 or 1.
Receiving	The wireless receiving function of the module is on, the data packet transmitted from the module working in mode 0 & mode 1 can be received. After the data packet is received, the AUX outputs low level, 5ms later the module starts to transmit wireless data through serial port TXD pin. After all the wireless data have been transmitted via serial port, the AUX outputs high level.

6.3 Wake-up Mode（Mode 1）

Status	When M1 = 0, M0 = 1, module works in mode 1
Transmitting	The condition of data packet transmission & AUX function is the same as mode 0. The only difference is that the module will add preamble code before each data packet automatically. The preamble code length depends on the wake-up time set in the user parameters. The purpose of the preamble code is to wake up the receiving module that works in mode 2. Therefore, the data package transmitted from mode 1 can be received by module in mode 0, mode1 and mode 2.
Receiving	The same as that in mode 0.

6.4 Power-saving Mode（Mode 2）

Status	When M1 = 1, M0 = 0, module works in mode 2
Transmitting	UART is closed, the module cannot receive any serial port data from outside MCU. Hence the function of wireless transmission is not available for the module working in this mode.
Receiving	In mode 2, it is required the data transmitter works in mode 1. The wireless module monitors the preamble code at regular time. Once it gets the preamble code, it will remain as receiving status and waiting for the completion of receiving the entire valid data package. Then the AUX outputs low level, 5ms later the serial port is open to transmit received wireless data through TXD. Finally， AUX outputs high level after process completed. The wireless module stays in "power-saving – monitoring" working status (polling). By setting different wake-up time, the module will have different receiving response delay (2s in maximum) and average power consumption (30uA in minimum). The user needs to achieve a balance between communication delay time & average power consumption.

Copyright ©2012–2017, Chengdu Ebyte Electronic Technology Co., Ltd.

6.5 Sleep Mode (Mode 3)

Status	When M1=1, M0=1，module works in mode 3
Transmitting	N/A
Receiving	N/A
Parameter setting	This mode can be used for parameter setting. It uses serial port 9600 & 8N1 to set module working parameters through specific instruction format. (Please refer to parameters setting for details)
Notes	When the mode changes from stand-by mode to others, the module will reset its parameters, during which the AUX keeps low level and then outputs high level after reset completed. It is recommended to check the AUX rising edge for user.

7. Instruction Format

In sleep mode (Mode 3：M0=1, M1=1,) , it supports instructions below.

(**Only support 9600 and 8N1 format when setting**)

No.	Instruction format	Illustration
1	C0 + working parameters	C0 + 5 bytes working parameters are sent in hexadecimal format. 6 bytes in total and must be sent in succession.(Save the parameters when power-down)
2	C1+C1+C1	Three C1 are sent in hexadecimal format. The module returns the saved parameters and must be sent in succession.
3	C2 + working parameters	C2 + 5 bytes working parameters are sent in hexadecimal format. 6 bytes in total and must be sent in succession. (Do not save the parameters when power-down)
4	C3+C3+C3	Three C3 are sent in hexadecimal format. The module returns the version information and they must be sent in succession.
5	C4+C4+C4	Three C4 are sent in hexadecimal format. The module will reset one time and they must be sent in succession.

7.1 Default Parameter

	Default parameter values：C0 00 00 18 19 44						
Model	Frequency	Address	Channel	Air data rate	Baud rate	Parity	Transmitting power
E51-TTL-50	230MHz	0x0000	0x19	1.2kbps	9600	8N1	50mW

	Default parameter values：C0 00 00 18 19 44						
Model	Frequency	Address	Channel	Air data rate	Baud rate	Parity	Transmitting power
E51-TTL-500	230MHz	0x0000	0x19	1.2kbps	9600	8N1	500mW

	Default parameter values：C0 00 00 18 19 44						
Model	Frequency	Address	Channel	Air data rate	Baud rate	Parity	Transmitting power
E51-TTL-2W	230MHz	0x0000	0x19	1.2kbps	9600	8N1	2W

Copyright ©2012–2017, Chengdu Ebyte Electronic Technology Co., Ltd.

7.2 Reading Operating Parameters

Instruction format	Description
C1+C1+C1	In sleep mode (M0=1 , M1=1) , User gives the module instruction (HEX format): C1 C1 C1, Module returns the present configuration parameters. For example, C0 00 00 18 19 44.

7.3 Reading Version Number

Instruction format	Description
C3+C3+C3	In sleep mode (M0=1 , M1=1) , User gives the module instruction (HEX format): C3 C3 C3, Module returns its present version number, for example C3 51 xx yy. 51 here means the module model (E51 series); xx is the version number and yy refers to the other module features.

7.4 Reset Instruction

Instruction format	Description
C4+C4+C4	In sleep mode (M0=1 , M1=1) , User gives the module instruction (HEX format): C4 C4 C4, the module resets for one time. During the reset process, the module will conduct self-check, AUX outputs low level. After reset completing, the AUX outputs high level, then the module starts to work regularly which the working mode can be switched or be given another instruction.

7.5 Parameter Setting Instruction

No.	Item	Description				Remark
0	HEAD	Fix 0xC0 or 0xC2, it means this frame data is control command				● Must be 0xC0 or 0xC2 C0: Save the parameters when power-down C2: Do not save the parameters when power-down
1	ADDH	High address byte of module（Default 00H）				00H-FFH
2	ADDL	Low address byte of module（Default 00H）				00H-FFH
3	SPED	7	6	UART parity bit		UART mode can be different between communication parties
		0	0	8N1（Default）		
		0	1	8O1		
		1	0	8E1		
		1	1	8N1（Equal to 00）		
		5	4	3	TTL UART baud rate (bps)	● UART baud rate can be different between communication parties ● The UART baud rate has nothing to do with wireless transmission parameters & won’t affect the wireless transmit / receive features.
		0	0	0	1200bps	
		0	0	1	2400bps	
		0	1	0	4800bps	
		0	1	1	9600 bps（Default）	
		1	0	0	19200bps	
		1	0	1	38400bps	
		1	1	0	57600bps	
		1	1	1	115200bps	
		2	1	0	Air date rate (bps)	● The lower the air date rate, the longer the transmitting distance, better anti-interference performance and longer transmitting time ● The air date rate must keep the same for both communication parties.
		0	0	0	1.2kbps（Default）	
		0	0	1	2.4kbps	
		0	1	0	4.8kbps	
		0	1	1	9.6kbps	
		1	0	0	19.2kbps	

Copyright ©2012–2017, Chengdu Ebyte Electronic Technology Co., Ltd.

		1	0	1	38.4kbps	
		1	1	0	50kbps	
		1	1	1	70kbps	
4	CHAN	7	6	5	N/A	● 0 Recommended.
		Communication channel				● 00H-3FH（64 communication channels） 225 ~ 237.6MHz
		5-0（225M + CHAN * 0.2M）, Default 19H：230MHz				
5	OPTION	7	Fixed transmission (Similar to MODBUS)			● In fixed transmission mode, the first three bytes of each user's data frame can be used as high/low address and channel. The module changes its address and channel when transmit. And it will revert to original setting after complete the process.
		0	Transparent transmission mode			
		1	Fixed transmission mode			
		6	IO drive mode(Default 1))			● This bit is used to the module internal pull-up resistor. It also increases the level' s adaptability in case of open drain. But in some cases, it may need external pull-up resistor.
		1	TXD and AUX push-pull outputs, RXD pull-up inputs			
		0	TXD and AUX open-collector outputs, RXD open-collector inputs			
		5	4	3	Wireless wake-up time	● The transmit & receive module work in mode 0, whose delay time is invalid & can be arbitrary value. ● The transmitter works in mode 1 can transmit the preamble code of the corresponding time continuously. ● When the receiver works in mode 2, the time means the monitor interval time (wireless wake-up). Only the data from transmitter that works in mode 1 can be received.
		0	0	0	250ms（Default）	
		0	0	1	500ms	
		0	1	0	750ms	
		0	1	1	1000ms	
		1	0	0	1250ms	
		1	0	1	1500ms	
		1	1	0	1750ms	
		1	1	1	2000ms	
		2	FEC switch			● After turn off FEC, the actual data transmission rate increases while anti-interference ability decreases. Also the transmission distance is relatively short. ● Both communication parties must keep on the same pages about turn-on or turn-off FEC.
		0	Turn off FEC			
		1	Turn on FEC（Default）			
		1	0	Transmission power (Approximation)		● For E51-TTL-50 ● The external power must make sure the ability of current output more than 150mA and ensure the power supply ripple within 100mV. ● Low power transmission is not recommended due to its low power supply efficiency.
		0	0	17dBm（Default）		
		0	1	14dBm		
		1	0	10dBm		
		1	1	7dBm		
		1	0	Transmission power (Approximation)		● For E51-TTL-500 ● The external power must make sure the ability of current output more than 0.6A and ensure the power supply ripple within 100mV. ● Low power transmission is not recommended due to its low power supply efficiency.
		0	0	27dBm（Default）		
		0	1	24dBm		
		1	0	21dBm		
		1	1	18dBm		
		1	0	Transmission power (Approximation)		● For E51-TTL-2W ● The external power must make sure the ability of current output more than 2A and ensure the
		0	0	33dBm（Default）		
		0	1	30dBm		

Copyright ©2012–2017, Chengdu Ebyte Electronic Technology Co., Ltd.

		1	0	27dBm	• power supply ripple within 100mV. • Low power transmission is not recommended due to its low power supply efficiency.
		1	1	24dBm	

For example: The meaning of No.3 "SPED" byte								
The binary bit of the byte	7	6	5	4	3	2	1	0
Configures by user	0	0	0	1	1	0	1	0
Meaning	UART parity bit 8N1		UART baud rate is 9600			Air data rate is 2.4k		
Corresponding hexadecimal	1			A				

8. Parameter Setting

When the module is in Mode 3 (M0=1 M1=1), the parameter can be set by instruction or software in PC.

Please visit www.cdebyte.com to download the software.

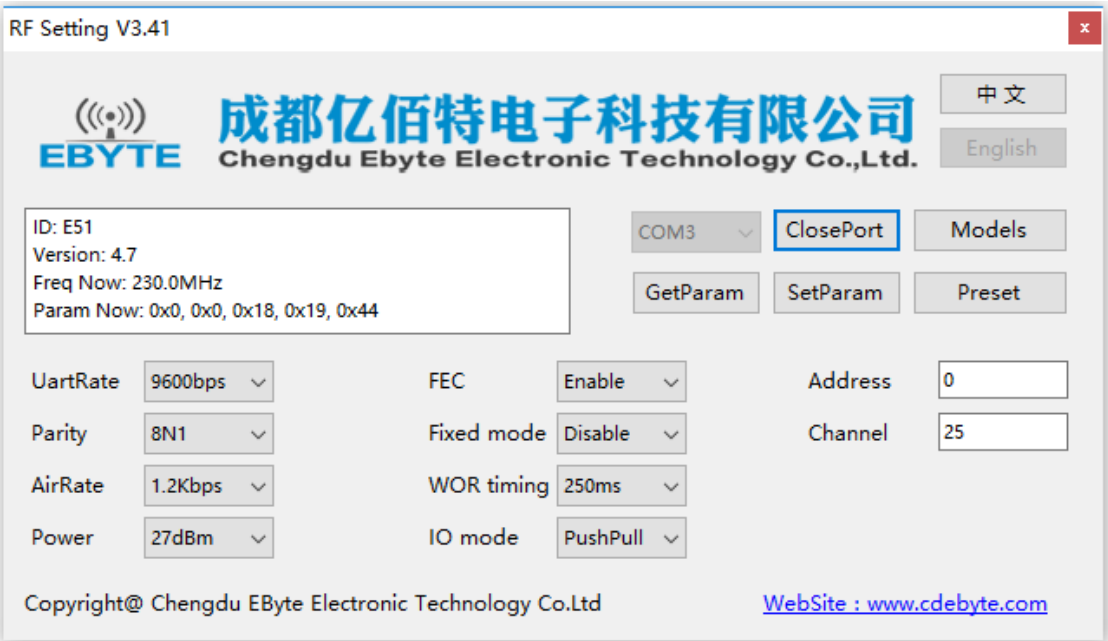

9. Production Guidance

9.1 Reflow Soldering Temperature

Profile Feature	Sn-Pb Assembly	Pb-Free Assembly
Solder Paste	Sn63/Pb37	Sn96.5/Ag3/Cu0.5
Preheat Temperature min （Tsmin）	100C°	150C°
Preheat temperature max (Tsmax)	150C°	200C°
Preheat Time (Tsmin to Tsmax)(ts)	60-120 sec	60-120 sec
Average ramp-up rate(Tsmax to Tp)	3C°/second max	3C°/second max
Liquidous Temperature (TL)	183C°	217C°
Time（tL）Maintained Above（TL）	60-90 sec	30-90 sec
Peak temperature（Tp）	220-235C°	230-250C°
Aveage ramp-down rate（Tp to Tsmax）	6C°/second max	6C°/second max
Time 25C° to peak temperature	6 minutes max	8 minutes max

Copyright ©2012–2017, Chengdu Ebyte Electronic Technology Co., Ltd.

9.2 Reflow Soldering Curve

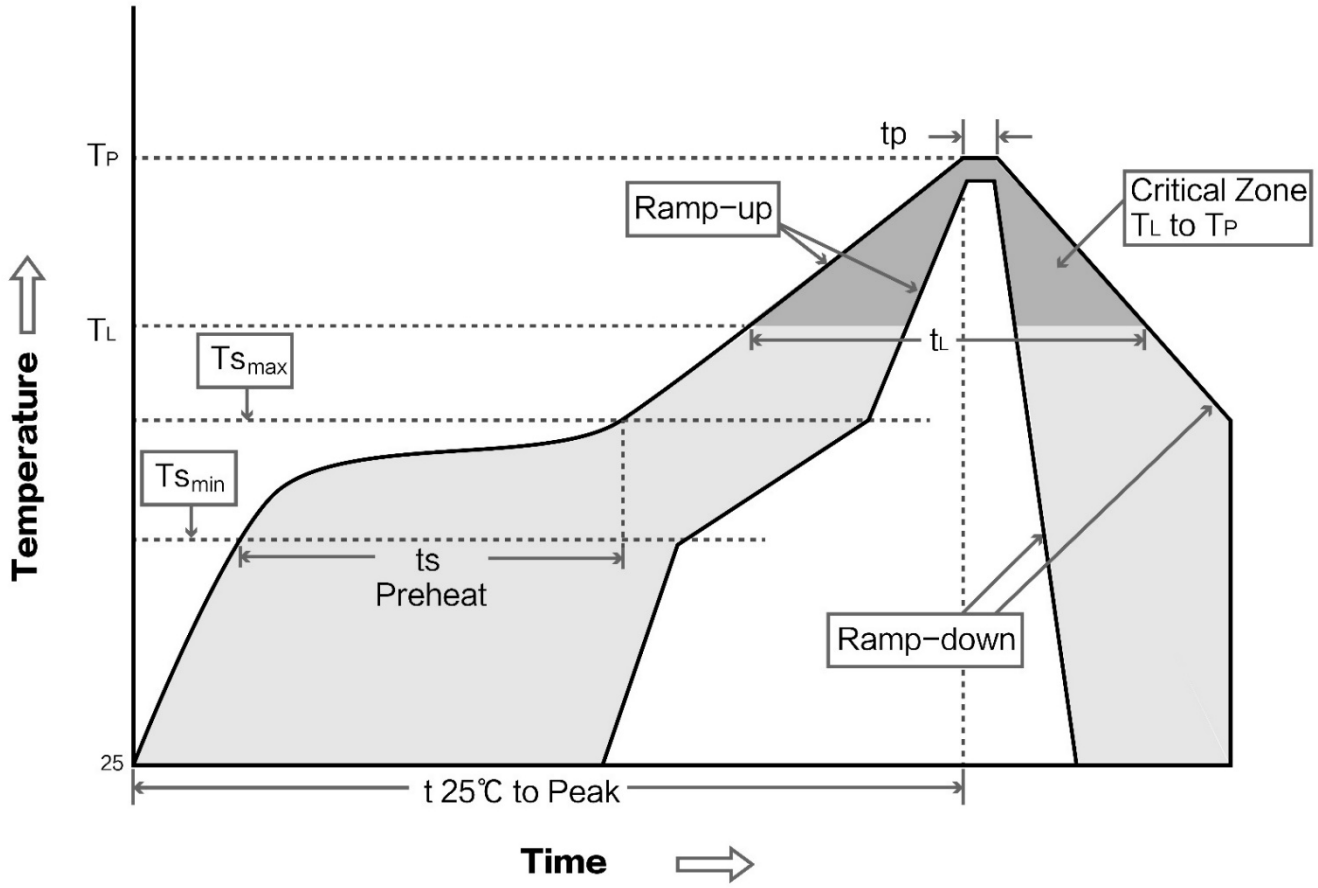

10. FAQ

10.1 Communication range is too short

- The communication distance will be affected when obstacle exists.
- Data lose rate will be affected by temperature, humidity and co-channel interference.
- The ground will absorb and reflect wireless radio wave, so the performance will be poor when testing near ground.
- Seawater has great ability in absorbing wireless radio wave, so performance will be poor when testing near the sea.
- The signal will be affected when the antenna is near metal object or put in a metal case.
- Power register was set incorrectly, air data rate is set as too high (the higher the air data rate, the shorter the distance).
- The power supply low voltage under room temperature is lower than the recommended value, the lower the voltage, the lower the transmitting power.
- Due to antenna quality or poor matching between antenna and module.

10.2 Module is easy to damage

- Please check the power supply source, ensure it is within the recommended value, voltage higher than that will damage the module.
- Please check the stability of power source, the voltage cannot fluctuate too much.
- Please make sure antistatic measure are taken when installing and using, high frequency devices have electrostatic susceptibility.
- Please ensure the humidity is within limited range, some parts are sensitive to humidity.
- Please avoid using modules under too high or too low temperature.

Copyright ©2012–2017, Chengdu Ebyte Electronic Technology Co., Ltd.

11. Important Notes

- All rights to interpret and modify this manual belong to Ebyte.
- This manual will be updated based on the upgrade of firmware and hardware, please refer to the latest version.
- Please refer to our website for new product information

12. About Us

Technical support: support@cdebyte.com

Documents and RF Setting download link: www.cdebyte.com/en/

成都亿佰特电子科技有限公司
Chengdu Ebyte Electronic Technology Co.,Ltd.

Tel：+86-28-61399028 Ext. 812

Fax：028-64146160

Web：www.cdebyte.com/en/

Address：Innovation Center D347, 4# XI-XIN Road,Chengdu, Sichuan, China

Copyright ©2012–2017, Chengdu Ebyte Electronic Technology Co., Ltd.