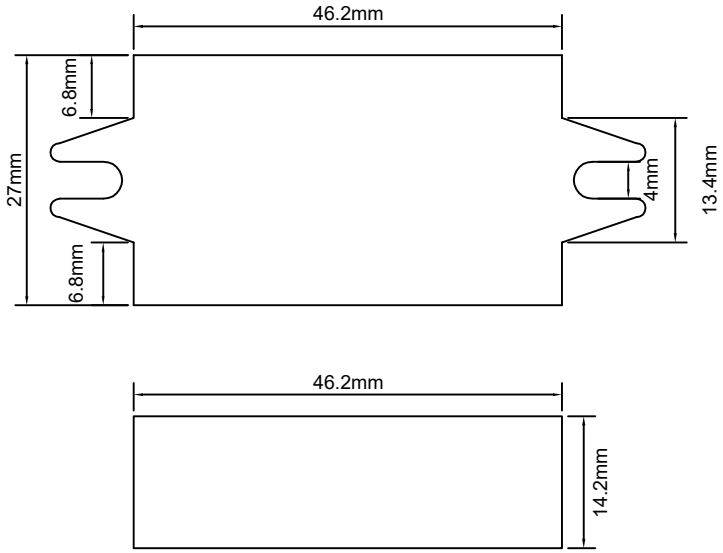
46.2mm
6.8mm
27mm
6.8mm
4mm
13.4mm
46.2mm
14.2mm